McCROMETER

SPI Mag™

CONFIGURATION SHEET

Model 282L With M-Series Converter

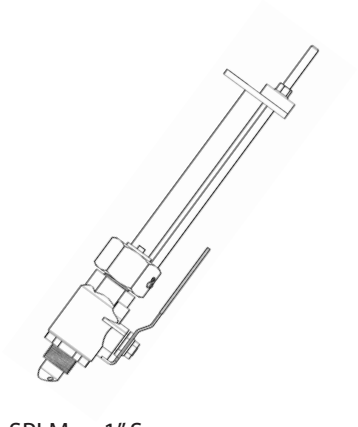

SPI Mag 1" Sensor

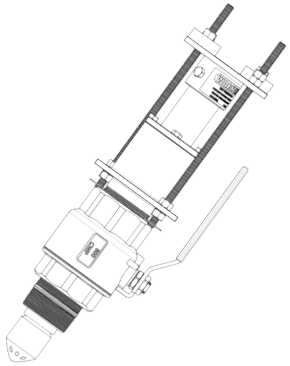

SPI Mag 2" Sensor

The SPI Mag™ (Single Point Insertion) Electromagnetic Flow Meter is a hot tappable single point insertion flow meter for measuring forward flow. The sensor is available for one-inch or two-inch taps, depending upon line size and application.

The SPI Mag is a cost effective flow meter solution with a purchase price that is independent of line size making the cost to meter a sixty-inch line the same as a two-inch. The SPI Mag's hot tap installation allows for uninterrupted service as it installs without system shut-down, de-watering lines, cutting pipe or welding flanges. Installation costs are reduced by eliminating the need for heavy equipment or extensive manpower. The SPI can be easily re-located to various line sizes.

The compact insertion design fits in confined spaces and offers complete accessibility. The flow meter can be removed in pipes under pressure for easy inspection, cleaning, calibrating or verification. It is particularly cost-effective for retrofit applications replacing flow meters or in sites never metered before.

This cost effective flowmeter is available for line sizes from 2 to 96 inches. The flow sensor comes pre-calibrated from McCrometer's NIST traceable Calibration Lab and requires no recalibration in the field. With no moving parts and a single-piece design, the SPI Mag's sensor contains nothing to wear or break, and it is generally immune to clogging by sand, grit or other debris.

The SPI Mag is easily installed without interruption of the flow process. Sensor insertion hardware is utilized to insert the sensor through a ball valve or corporation stop in the flow conduit. Measurements are taken at the nearest pipe wall with negligible pressure drop in the pipe.

The SPI Mag allows profiling of the pipe inside diameter, further enhancing its measurement accuracy by allowing precise determination of mean velocities.

Accurate Flow Measurement for:

Wastewater: (2" only)
- Effluent
- Waste Activated Sludge (WAS)
- Return Activated Sludge (RAS)
- Reclaim / Recycle

Clean Water: (1" or 2")
- Raw Water Intake
- Clear Wells

M Series Converter:
- Pre-programmed
- Curve-fitting algorithm to improve accuracy
- 4-20mA (1000 ohm) analog output
- Eight line graphical display
- Three key touch programming
- Rugged enclosure meets IP67

Benefits:

- Easy to relocate to various line sizes
- Ease of hot-tap installation
- Installs without service interruption
- Insertion design for total accessibility
- Price is independent of line size
- No moving parts
- Does not require recalibration in the field

McCrometer, Inc. 3255 WEST STETSON AVENUE • HEMET, CALIFORNIA 92545 USA TEL: 951-652-6811 • 800-220-2279 • FAX: 951-652-3078 www.mccrometer.com
Printed In The U.S.A.
Lit. # 24511-12 Rev. 1.5/08-13

Copyright © 2010-2013 McCrometer, Inc. All printed material should not be changed or altered without permission of McCrometer. Any published technical data and instructions are subject to change without notice. Contact your McCrometer representative for current technical data and instructions.

McCROMETER

SPI Mag™

CONFIGURATION SHEET

Model 282L With M-Series Converter

MEASUREMENT
Volumetric flow in filled flow conduits 2" (50mm) to 96" (2,440 mm) diameter utilizing insertable velocity sensor. 1" meter = 2" to 30" pipe I.D.; 2" meter = 6" to 96" pipe I.D.
Flow indication in English Standard or Metric units.

FLOW MEASUREMENT
Method: Electromagnetic
Accuracy: ±2% of reading ±0.03 ft/s (±0.009 m/s) zero stability from 0.3 to 32 ft/s (0.09 to 10 m/s) velocity range
Velocity Range: +0.3 to +32 ft/s (+0.09 to +10 m/s)
Has reverse flow indication

CONDUCTIVITY
Minimum conductivity of 5µS/cm

POWER REQUIREMENTS
AC: 90-265V 45-66 Hz (20W/25VA) or
DC: 10-35V (21W)
AC or DC must be specified at time of ordering.

MATERIALS
Sensor: Polyurethane exposed to flow
2" Sensor Mounting: PVC and Stainless Steel exposed to flow. (Stainless Steel Insertion Tube Optional)
Compression Seal: Buna "N" O-Ring seal exposed to flow.

OUTPUTS
Dual 4-20mA Outputs: Galvanically isolated and fully programmable for zero and full scale (0-21mA)

Four separate digital programmable outputs: open collector transistor usable for pulse, frequency, or alarm settings.

- Volumetric Pulse
- Flow Rate (Frequency)
- Hardware Alarm
- High/Low Flow Alarms
- Empty Pipe
- Directional Indication
- Range Indication

CONVERTER ENCLOSURE
IP67 Die cast aluminum
5.75" H x 5.75" W x 6.69" D
(14.6 cm H x 14.6 cm W x 17 cm D)

ELECTRICAL CONNECTIONS
Compression gland seals for 0.125" to 0.375" dia. round cable.

ISOLATION
Galvanic separation to 50VDC between analog, pulse/alarm, and earth/ground

RATINGS
IP68 Submersible Sensor
IP67 Die Cast Aluminum Converter

CERTIFICATIONS - CONVERTER ONLY
- Safety: Listed by CSA to 61010-1: Certified by CSA to UL 61010-1 and CSA C22.2 No.61010-1-04
- CE: Certified

ENVIRONMENTAL
Pressure/Temperature Limits:
PVC Insertion Tube: Up to 105°F (41°C) at 150 PSI

Stainless Steel Insertion Tube: Up to 160°F (71°C) at 250 PSI (McCrometer recommends the use of Stainless Steel)

Electronics: Operating and storage temperature: -4° to 140°F (-20°C to +60°C)

INSERTION TUBE
- To determine insertion tube length for typical near wall installations, divide the pipe I.D. by 8 and add 18".
- For full profiles, add 18" to the pipe I.D.
- Tube assemblies include rods and mounting hardware

1"	Stainless steel tube, 12" length. Will profile 4" pipe I.D.
	Stainless steel tube, 24" length. Will profile 16" pipe I.D.
	Stainless steel tube, 36" length. Will profile 28" pipe I.D.
2"	PVC tube, 18" length. Will profile a 10" pipe I.D.
	PVC tube, 24" length. Will profile a 16" pipe I.D.
	PVC tube, 30" length. Will profile a 22" pipe I.D.
	Opt.: stainless steel tube. Specify length - 65" maximum

KEYPAD AND DISPLAY
Can be used to access and change set-up parameters using three membrane keys and LCD display.

OPTIONS
- DC Power
- RS485 port for easy connection to DCS
- Sun Shield
- Stainless Steel ID Tag
- Valves
- Additional Sensor Cable up to 200' (for longer lengths consult factory)
- Sensor Insertion Tool

ORDERING REQUIREMENTS
At the time of ordering, please be prepared to provide the following information:

- Model and tap size
- Insertion tube length
- Pressure
- Minimum flow
- Maximum flow
- Typical flow
- Fluid
- Pipe I.D.
- Cable length
- Temperature
- Any other chemicals in use
- Indicator and totalizer units

McCrometer, Inc. 3255 WEST STETSON AVENUE • HEMET, CALIFORNIA 92545 USA TEL: 951-652-6811 • 800-220-2279 • FAX: 951-652-3078 www.mccrometer.com
Printed In The U.S.A.
Lit. # 24511-12 Rev. 1.5/08-13

Copyright © 2010-2013 McCrometer, Inc. All printed material should not be changed or altered without permission of McCrometer. Any published technical data and instructions are subject to change without notice. Contact your McCrometer representative for current technical data and instructions.