FC500 FlowConnect System for Mc Propeller Flow Meters

Installation, Operation And Maintenance Manual

30122-20 Rev. 1.5
November 1, 2023

McCROMETER

www.mccrometer.com

Contents

1.0 SAFETY 1
Safety Symbols and Warnings 1
Personnel Safety 1
Electrical Safety 1

2.0 INTRODUCTION 2
2.1 Description 2
2.2 Typical Configurations 2
2.3 Location of Accessible Components 2
2.4 Model Number Identification / Finding the Unit Serial Number 3

3.0 INSTALLATION 3
3.1 Attaching the Antenna 4
3.2 Connecting the Batteries 5
3.3 Attaching the Tamper Evident Seal 5

4.0 INSTALLING SENSORS AND SOLAR PANEL 6
4.1 Recommended Standards 6
4.2 Installing a Solar Panel 7
4.3 Installing a Rain Gauge 7
4.4 Installing a Pressure Sensor 8

5.0 CONNECTING POWER, INPUTS AND OUTPUTS 9
5.1 Power Connector 10
5.2 Inputs Connector 10
5.3 Outputs Connector 10

6.0 ACCESSING THE DATA 11
6.1 Your Account Information 11
6.2 Web Interface: addVANTAGE Pro 11

7.0 PRODUCT SPECIFICATIONS 12
7.1 Specifications 12
7.2 Dimensions 14
7.3 Optional Register Cover 14

8.0 MAINTENANCE 14
8.1 Recommended Maintenance 14

WARRANTY 15

1.0 SAFETY

Safety Symbols and Warnings

Throughout this manual are safety warning and caution information boxes. Each warning and caution box will be identified by a large symbol indicating the type of information contained in the box. The symbols are explained below:

WARNING - This symbol indicates important safety information. Failure to follow the instructions can result in serious injury or death.

IMPORTANT - This symbol indicates important information. Failure to follow the instructions can result in permanent damage to the meter, other equipment, or installation site.

Personnel Safety

When installing, operating, and maintaining McCrometer equipment where hazards may be present, you must protect yourself by wearing Personal Protective Equipment (PPE) and be trained to enter confined spaces. Examples of confined spaces are manholes, pumping stations, pipelines, pits, septic tanks, sewage digesters, vaults, degreasers, storage tanks, boilers, and furnaces.

You must follow all state and local laws, as well as Occupational Health and Safety Administration (OSHA) regulations concerning Personal Protective Equipment, confined-space entry, and exposure to bloodborne pathogens. Specific requirements can be found in the OSHA section of the Code of Federal Regulations: *29 CFR, 1910.132 - 1910.140, Personal Protective Equipment; CFR Title 29, Part 1910.146, Permit-Required Confined-Spaces; and 29 CFR, 1910.1030, Bloodborne Pathogens.*

Never enter a confined space without first testing the air at the top, middle, and bottom of the space. The air may be toxic, oxygen deficient, or explosive. Do not trust your senses to determine if the air is safe. You cannot see or smell many toxic gases.

Never enter a confined space without the proper safety equipment. You may need a respirator, gas detector, tripod, lifeline, and other safety equipment.

Never enter a confined space without standby/rescue personnel within earshot. Standby/rescue personnel must know what action to take in case of an emergency.

Pressurized pipes should only be tapped, cut, or drilled by qualified personnel. If possible, depressurize and drain the pipe before attempting any installation.

Electrical Safety

Devices that incorporate electrical power (or that come into contact with materials that have the potential to be electrified) must be properly grounded to ensure the safety of personnel that come into contact with the device. The National Electrical Code (NEC) provides measures that, when fully complied with, ensure electrical safety of the device. The FlowConnect device must be grounded in a manner in compliance with the NEC (or other observed regulatory standard) in order to ensure this level of safety to personnel that come in contact with this device.

2.0 INTRODUCTION

2.1 Description

The FC500 FlowConnect system provides battery operated wireless telemetry of flow and sensor data. The FlowConnect system can be used with mechanical or digital registers and can be mounted on the meter or remotely. The FlowConnect system utilizes either cellular or satellite radio communication. The FlowConnect system features standard or rechargeable batteries that can be powered by a solar panel.

2.2 Typical Configurations

The Mc Propeller FlowConnect system can be configured with these options:

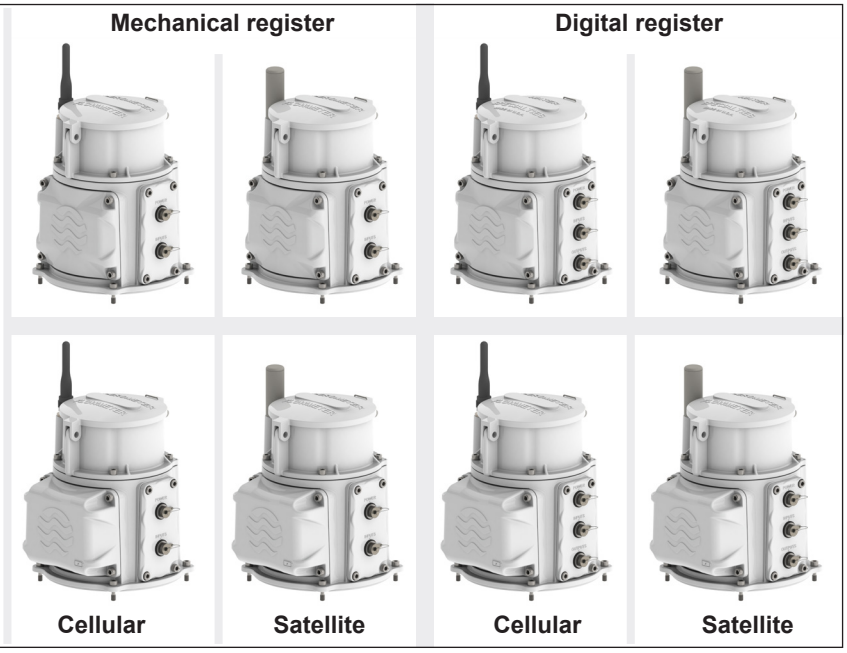

Figure 1. Typical FlowConnect system configurations

2.3 Location of Accessible Components

The figure at right shows the location and names of the components you will work with in this IOM.

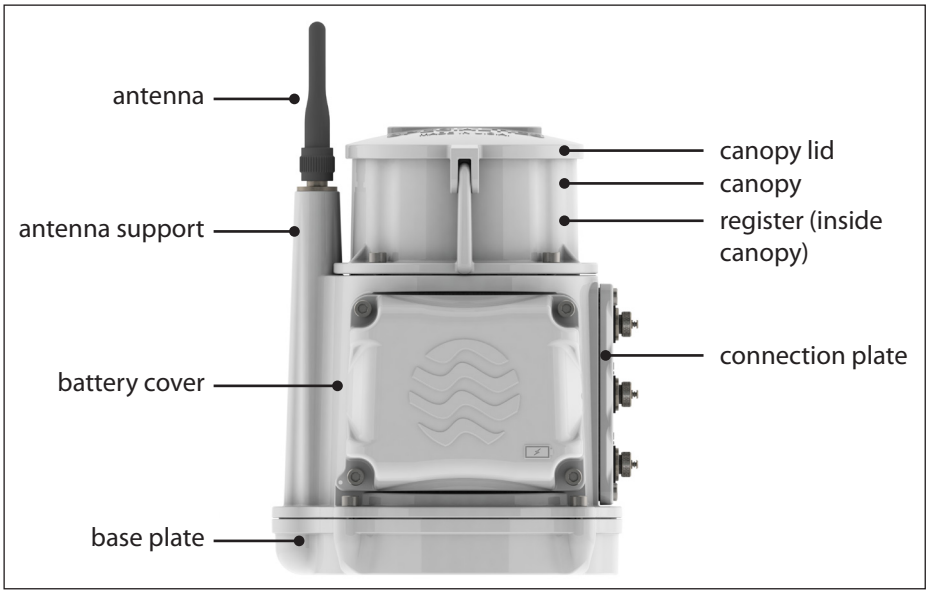

Figure 2. Accessible components

2.4 Model Number Identification / Finding the Unit Serial Number

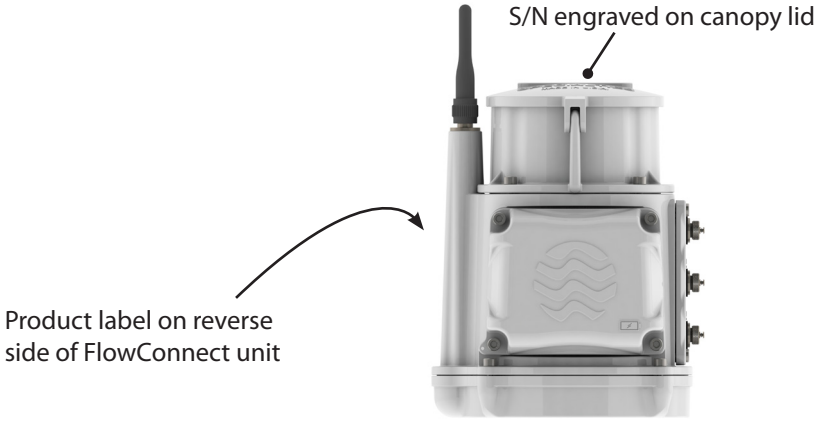

Figure 3. Locations of Unit Serial Number

3.0 INSTALLATION

If this is a new installation, install the flow meter first before proceeding to the installation and activation of the FlowConnect system. Follow the Installation, Operation, and Maintenance (IOM) manual for Mc Propeller Flow Meters that was shipped with the unit. It can be found in the plastic bag containing the documentation for the flow meter.

I **IMPORTANT**
This manual does not contain retrofit instructions for existing flow meters. Because there are several different possible flow meter configurations, each retrofit has its own stand-alone set of instructions.

If you are retrofitting a flow meter to a FlowConnect unit, you should have received the instructions with the equipment. However, if your instructions are lost or missing, you can download them from the McCrometer web site at www.mccrometer.com/library. Select "Mc Propeller Flow Meters" in the drop-down box, and scroll down to "Manuals". Select them by their literature numbers.

30122-35	Retrofitting a Mc Propeller to FlowConnect with Standard Register
30122-36	Retrofitting a Mc Propeller with FlowCom to FlowConnect with FlowCom
30122-37	Retrofitting a Mc Propeller with FlowCom to FlowConnect with FlowCom - existing remote mount
30122-38	Retrofitting a Mc Propeller with FlowCom to FlowConnect with FlowCom - new remote mount
30122-39	Retrofitting a Mc Propeller to FlowConnect with FlowCom
30122-40	Retrofitting a Mc Propeller to FlowConnect with FlowCom - new remote mount

3.1 Attaching the Antenna

Warning! The antenna MUST be attached before the batteries are inserted! Powering up the unit without the antenna may damage the modem!

Attach the antenna or antenna extension by screwing it to the antenna post.

Figure 4. Attaching the cellular antenna

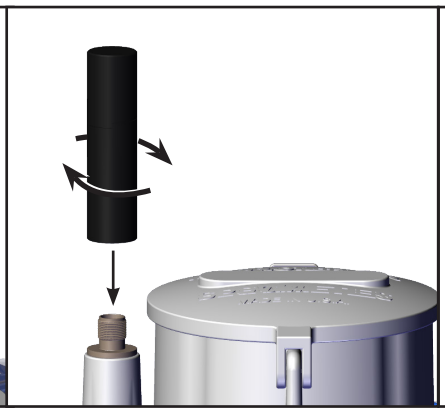

Figure 5. Attaching the satellite antenna

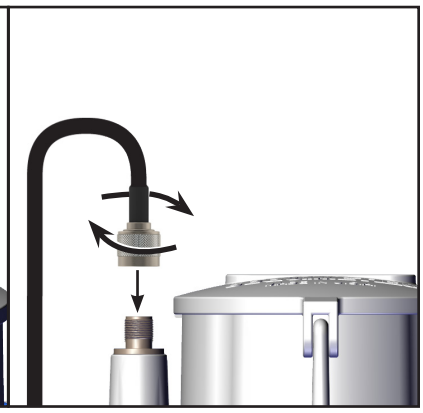

Figure 6. Attaching the antenna extension

STEPS TO ENSURE GOOD COMMUNICATIONS

- The FlowConnect satellite antenna should have a good view of the sky, preferably to the horizon.
- The FlowConnect cell antenna should not be over-shadowed by surrounding pumps, filters, vegetation, or other obstructions.
- Extended antenna kits are available for both satellite and cellular models to raise and improve communications.
- Directional antennas are available for cellular models to further boost transmission and reception.

3.2 Connecting the Batteries

> ***WARNING! The antenna MUST be attached before the batteries are inserted!***
> Connecting the batteries before the antenna is attached may cause damage to the modem board.

Connecting the batteries for both rechargeable and non-rechargeable types is identical.

a. Remove the battery cover with a 5/32" hex driver.

b. Ensure the batteries are in place and plug the leads into the connectors in the order shown below.

c. Replace the battery cover, making sure the O-ring is set in place properly, and tighten the four screws hand tight.

Non-rechargeable batteries

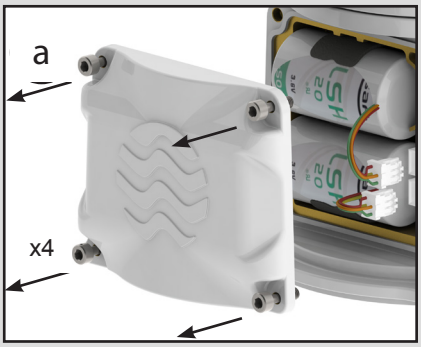

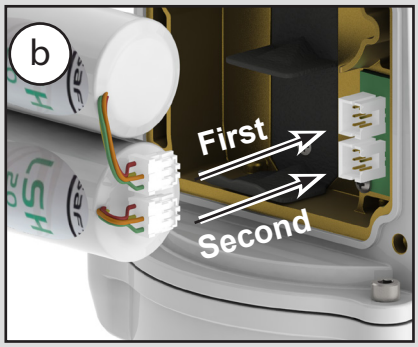

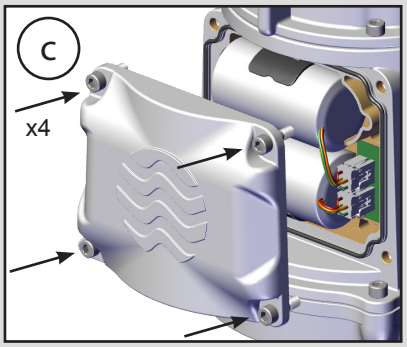

Rechargeable battery

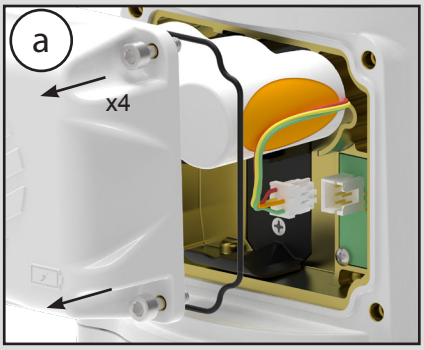

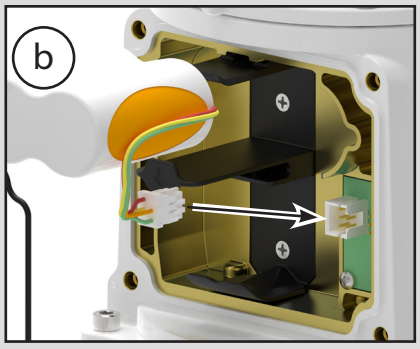

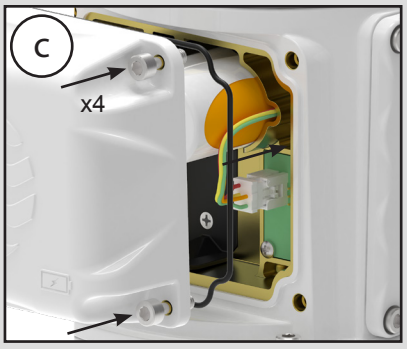

3.3 Attaching the Tamper Evident Seal

a. Thread the wire end through the security hole near the battery cover and through the hole in the screw as shown in Figure 7.

b. Set the wire in the lock portion of the seal and close the clasp.

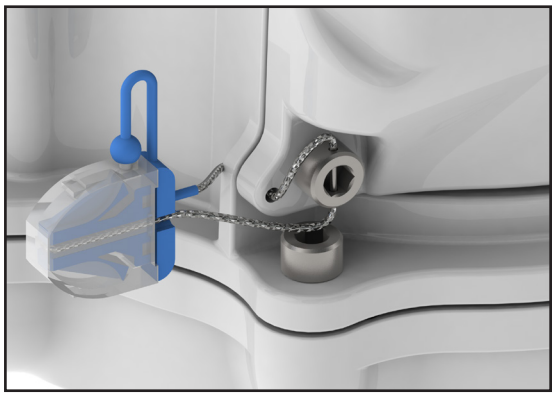

Figure 7. Tamper evident seal

4.0 INSTALLING SENSORS AND SOLAR PANEL

The method you use to install a sensor mount will depend on the sensor type and local site conditions. The site location for a pressure sensor, the aerial mast to mount a rain gauge, or the need for cable protection, may vary.

Because each user's requirements and conditions will vary, McCrometer does not require any particular way of mounting or securing the sensor pole. However, we do provide recommended standards for how your sensor mount should be installed. These standards are flexible enough to allow you to install your sensors under most conditions while being able to take into account your local circumstances.

4.1 Recommended Standards

Pole set

You may choose to use the McCrometer pole set, or you may use a pole set more to your preferences.

Pole and aerial height

Height of 5' to 10', elevating an antenna 4' to 5' feet above surrounding obstructions.

Pole diameter

Any pole that is 1.25" to 2" in diameter will work with McCrometer sensors.

Solar panel orientation

If you are installing a solar panel, orient it so that it is facing south in the northern hemisphere.

Securing / anchoring

There are many ways to install and secure an aerial mast for a solar panel, rain gauge, or antenna extension. We recommend installing the mast plumb. The lower part of the mast may be buried or cemented into the ground, or it may be secured to surrounding fixed objects. The installation should be secure enough to withstand the expected environmental conditions (such as strong wind) as well as foot traffic at or near the installation site.

Cable protection

We recommend you consider cable protection for use against animals, foot traffic, or vehicle traffic around the installation site. Common methods include the use of metal or flexible conduit sufficient to accommodate the ½" connectors used on solar panels and sensor cables.

Cable management

It is recommended that you secure sensors or extension cables near any sharp metal edges such as hose clamps.

We also recommend securing cables about every 12" - 18" along the aerial mast.

Additional site protection

Some sites may require additional protection from damage from livestock or vandalism. Fencing, cattle guards, or other measures may be necessary.

4.2 Installing a Solar Panel

TOOLS AND MATERIALS

Tools and Materials:

Solar Panel kit (200.733.522)
7 mm socket driver
5-pin male to female extension cable

Use a hose clamp and 7 mm socket driver to attach the solar panel to the top of the pole.

Orient the solar panel south so that it gets a maximum amount of light.

Connect the extension cable to the solar panel. When you are finished, the other end of the cable will be plugged into the FlowConnect unit (see next section).

If you are also installing a rain gauge with a solar panel, they should be mounted on the same pole, directly opposite each other (Figure 8).

4.3 Installing a Rain Gauge

TOOLS AND MATERIALS

Tools and Materials:

Rain Gauge kit, model RG1
7 mm socket driver
7-pin male to female extension cable

Use a 7 mm socket driver and two hose clamps to secure the rain gauge to the top of the pole such that the mouth of the rain gauge is level with the end of the pole (Figure 8).

Connect the extension cable to the rain gauge. When you are finished, the other end of the cable will be plugged into the FlowConnect unit (see next section).

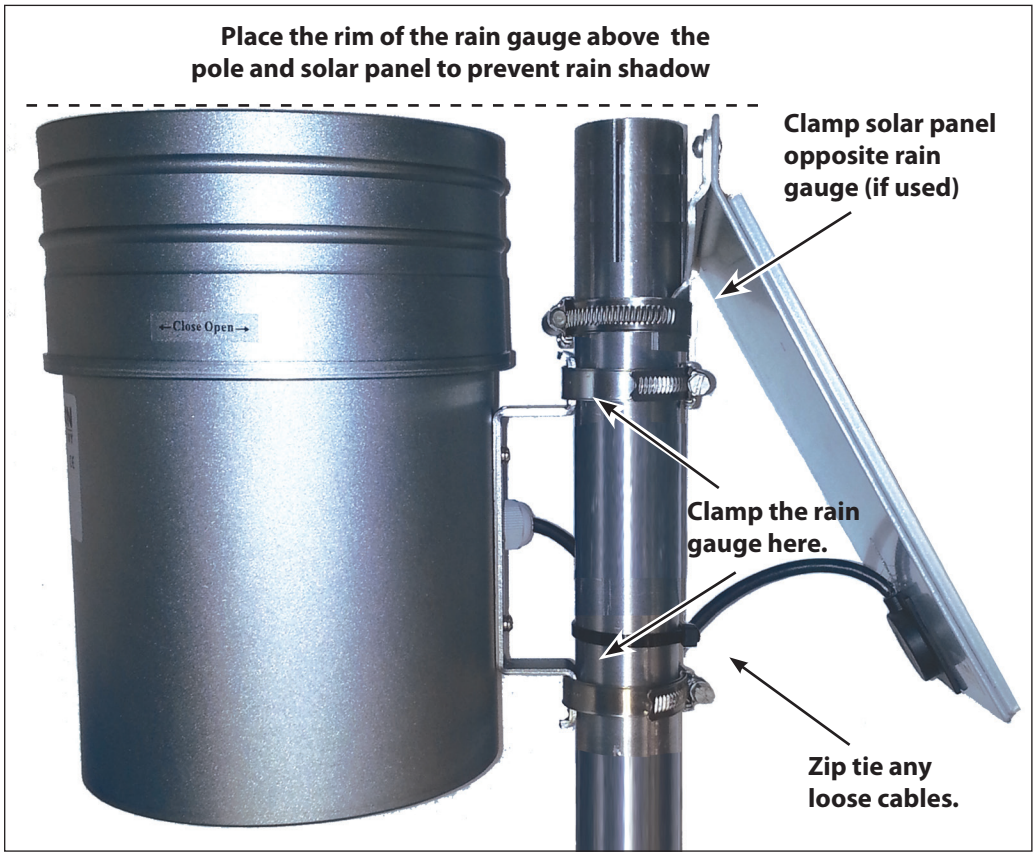

Figure 8. Solar panel and rain gauge attached to pole mount

When all sensors have been installed, secure all loose cables with zip ties, especially cables near sharp metal edges such as hose clamps.

Secure cables about every 12" - 18".

4.4 Installing a Pressure Sensor

If you want to install a pressure sensor that can transmit measurement data to the FlowConnect unit, you will need the tools and materials listed at right.

This instruction is for a pipe that has an existing pressure gauge. If your pipe does not already have a location tapped and threaded, that will need to be done first. When completed, follow this instruction from step 2 below.

TOOLS AND MATERIALS

Note: Sensor parts are sold individually or as a bundle. The parts listed below are for sensor and cable bundles.

PA-1 sensor and 10 m cable bundle (500.000.119) or
PA-1 sensor and 5 m cable bundle (500.000.120)
Cable for PA-1 pressure sensor
PA-1 pressure sensor 0-30 bar (200.733.162)
Crescent wrench or adjustable wrench
Channel locks (need to accommodate 3/4" pressure gauge)
Brass or steel wire brush

WARNING!
Never remove a gauge while the line is under pressure!

1. Remove the existing gauge from the pipe.
2. Clean the interior pipe threads and remove any debris.
3. Wrap the pipe threads on the pressure sensor with Teflon tape.
4. Screw in the pressure sensor by hand until it is tight, then use the channel locks to fully tighten it.
5. Connect the extension cable to the pressure sensor.
6. Coil and secure any extra sensor cable with zip ties to prevent cable from being damaged or becoming a hazard.

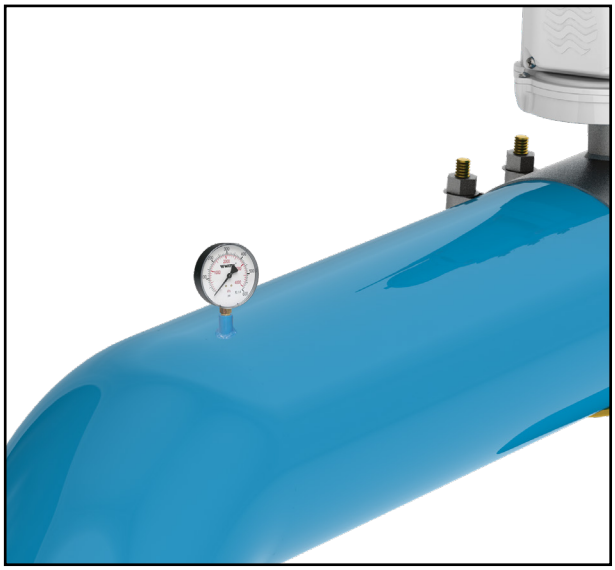

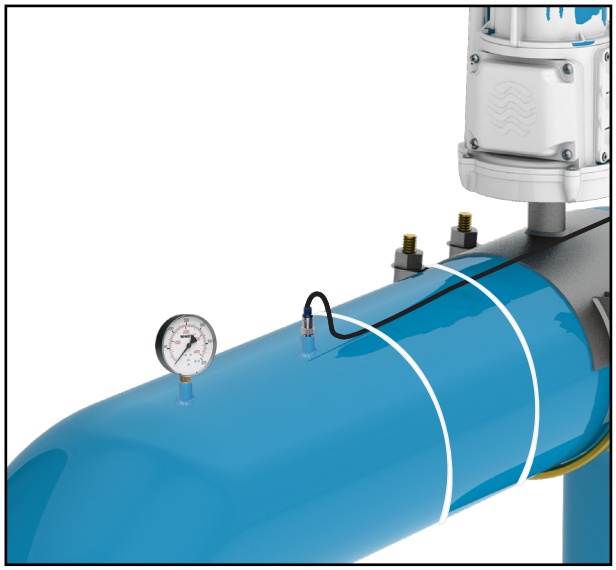

5.0 CONNECTING POWER, INPUTS AND OUTPUTS

> **IMPORTANT!**
> Before purchasing any sensors, be sure to confirm that they are compatible with the FlowConnect system.

Figure 9 and Figure 10 below show possible methods of connecting inputs, outputs, and external power to the FlowConnect system. The examples in the figures show a FlowConnect with rechargeable batteries. If your system does not have rechargeable batteries, the connection plate will have only two connectors, Inputs and Outputs.

See the following page for discussion of the Power, Inputs, and Outputs connectors.

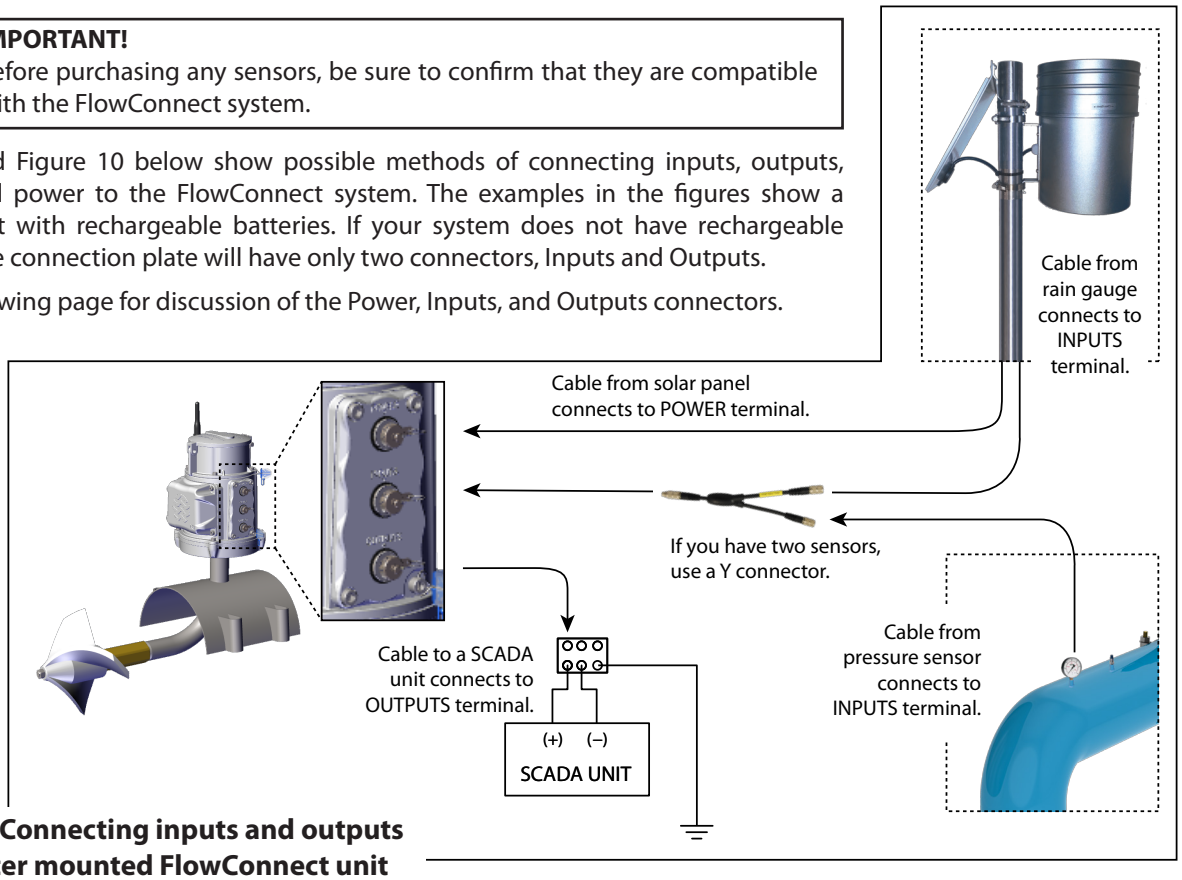

Figure 9. Connecting inputs and outputs to a meter mounted FlowConnect unit

Figure 10. Connecting inputs and outputs a remote mounted FlowConnect unit

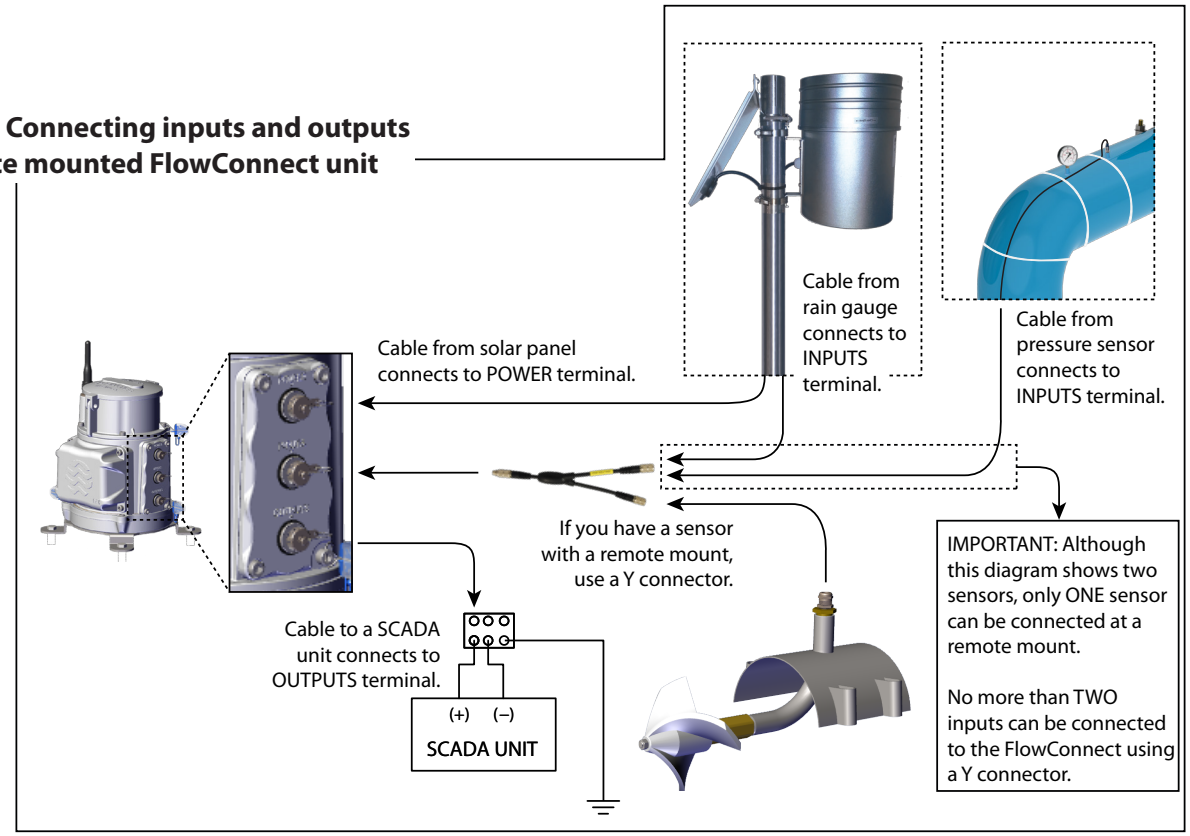

5.1 Power Connector

For models with rechargeable batteries, a solar panel can be connected through the Power connector at the top of the connector plate.

5.2 Inputs Connector

The FlowConnect unit supports up to two analog inputs through the Inputs connector. Inputs are most often sensors, such as a rain gauge or a pressure sensor. The Inputs connector will either be in the middle or at the bottom of the connector plate.

For simple configurations with just one sensor, plug the sensor directly into the Inputs port. To connect more than one sensor to the Inputs port, a Y-Cable (200.720.510) is needed. No more than two sensors can be connected at once, so only one Y-Cable is required.

5.3 Outputs Connector

The Outputs connector is only available on FlowConnect models with a digital register. It provides 4-20mA and pulse output options. To enable the FlowConnect to send a 4-20mA or pulse output to another system, such as a SCADA system, an output cable (5M-025-OE) is required. If you choose to use this option, use the table below as a guide for wire colors:

Output Cable Wire Color:	Grey	Black or Green	Brown	Blue or Yellow	White
Open Collector Pulse Only				Pulse (-)	Pulse (+)
Optically Isolated Pulse and 4-20mA	4-20mA (+)	4-20mA (-)		Pulse (-)	Pulse (+)
Relay Pulse and 4-20mA	4-20mA (+)	4-20mA (-)	Normally Closed	Common	Normally Open

6.0 ACCESSING THE DATA

IMPORTANT!
If you have not first attached the antenna and installed the batteries, the FlowConnect unit will not transmit data. If you have not done these two things first, return to page 4 to prepare the unit.

STEPS TO ENSURE GOOD COMMUNICATIONS

- The FlowConnect satellite antenna should have a good view of the sky, preferably to the horizon.
- The FlowConnect cell antenna should not be over-shadowed by surrounding pumps, filters, vegetation, or other obstructions.
- Extended antenna kits are available for both satellite and cellular models to raise and improve communications.
- Directional antennas are available for cellular models to further boost transmission and reception.

6.1 Your Account Information

Your account information will not be sent with the flow meter. To create an account, send an email to provisioning@mccrometer.com containing your name and serial numbers of any units you purchased. Your account information will be sent to you by reply email. If you have multiple units, they can all be accessed with the same account. For additional assistance with your account, contact techsupport@mccrometer.com.

6.2 Web Interface: addVANTAGE Pro

addVANTAGE Pro is a web-based software and decision support system for managing, analyzing, and visualizing data from McCrometer's FlowConnect platform as well as other McCrometer CONNECT products.

To connect to the addVANTAGE Pro web interface, open a browser and enter the URL address provided with the FlowConnect unit. A login window similar to the one in Figure 11 will be displayed.

Enter the User Name and Password provided with the FlowConnect unit and click the Login button to access the system. If the account data was correct, a window showing the areas, sensors, and data panels associated with the FlowConnect unit will be displayed.

For more information about the addVANTAGE Pro web interface and navigating the data, see addVANTAGE PRO user guide, which can be downloaded at http://fc01.mccrometer.net/doc/help_en.pdf

Figure 11. addVANTAGE Pro Login Window

7.0 PRODUCT SPECIFICATIONS

7.1 Specifications

Communication

Network Type	Cellular	Satellite
Protocols	GSM/GPRS	Iridium
Operating Frequency (MHz)	824–849 869–894 1850–1910 1930–1990 1710–1755	1616-1626.5
Antenna	External Bulkhead Extension TNC Antenna 800/1800/1900 MHz	External Bulkhead Extension TNC Antenna 1,600 Mhz

Power

Batteries	Batteries can be replaced by user on-site **Battery Only:** 2 Primary D-Cells 3.6V 13Ah (Both batteries need to be replaced at the same time) **Rechargeable:** 1 Primary D-Cell 3.6V and 3 Secondary C-Cells, 1.2V in series
External Power	Requires Rechargeable Battery Configuration listed above. Recommended 9-12 VDC, 0-1000mA Max: 14.5 VDC (Power supply or solar panel)
Recommended Battery Replacement Interval	**Battery Only:** 3 years (Daily Report Interval) **Rechargeable:** 4 years

Environmental

Operating Temperature	- 30^{0}C to 70^{0}C (-22^{0}F to 158^{0}F)
Electrical / Mechanical Protection	All electrical components are grounded to fluid column and pipe. Manufactured in accordance with IP-67 Standards and ESD-safe
Environmental Protection	Ingress Protection (Dust Tight / Water Tight) to IP67 Vibration proof while operating: Validated Vibration and 20G Sinusoidal testing to JEDEC 22B103B Section 4.3, Table 3, Service Condition C, for all axis and 20G sin sweep 20 - 2,000Hz for all axis.
Tamper Protection	Factory installed tamper-evident wire lock system

Other Characteristics

Mounting	Top Plate compatible with any McCrometer Propeller or Water Specialties (Digital Register Only)
External Interface	Five-pin serial-USB cable
Flow Indicator	Digital Register or McPropeller Mechanical Register
Operating Temperature	- 30°C to 70°C (-22°F to 158°F)
Inputs	Two analog sensors, 1 pulse accumulator (for rain gauge)
Outputs	**Mechanical Register:** None **Digital Register:** 4-20 mA, Open Collector Pulse, Dry Contact Pulse, Optically Isolated Pulse (via 5- pin output cable)
Data Collection Method	**Digital Register:** Serial interface between FlowConnect and digital register allows FlowConnect to read totalizer and rate value directly. No pulse counting required and always a perfect match. **Mechanical Register (McPropeller only):** Pulse counter and high-low digital signal for forward-reverse pulses. Accuracy between meter and Web totalizer: ±0.25%
Data Storage	Capable of storing up to 1,000 reports in local memory

Accessories

Optional Protective Cover	Gray boot cover, p/n TOB065	
Serial Accessories	200.720.542 serial-USB cable	
Power Accessories	**Rechargeable:** 200.733.522 5W 540 mA Solar Panel 200.720.523 115V Power Supply **Battery Only:** No Power Accessories	
Sensor Accessories	Adcon PA1 Cables - Pressure 10bar 500.000.120 - 16 ft. Cable 500.000.119 - 32 ft. Cable 200.733.048 - RGI Rain Gauge 200 200.720.510 - Y Cable 200.733.902 - A902 1/2/3 Cable	
Communication Accessories	**Cellular**	**Satellite**
	900.000.590 TNC Rigid Antenna (Included) 900.000.565 Directional Antenna 900.000.567 Extension Antenna	TOB039 Helical Antenna (Included) MCC-510-AI-A Extension Antenna, Magnet Mount

Dimensions

Network Type	**Cellular**	**Satellite**
Unit Enclosure Size	W x D x H	W x D x H
Non-Rechargeable	6.5" x 5.6" x 9.9"	6.5" x 5.6" x 9.8"
Rechargeable	6.5" x 6.1" x 9.9"	6.5" x 6.1" x 9.8"
Packaged Dimensions	11" x 11" x 11"	11" x 11" x 11"
Packaged Weight	6 lbs.	6 lbs.

7.2 Dimensions

7.3 Optional Register Cover

Note: The models shown below are used as general examples of the most common features and may not necessarily represent your particular model.

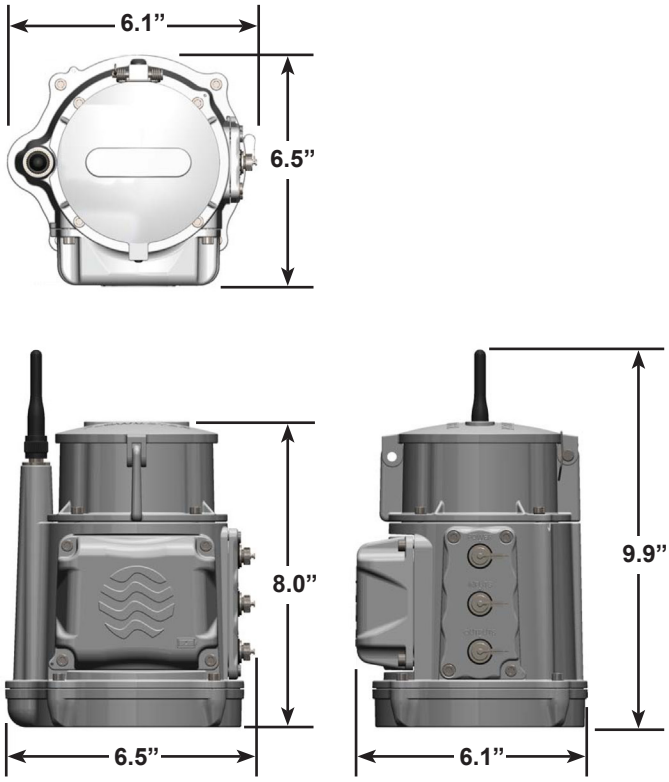

Figure 12. FlowConnect unit with rechargeable batteries and cellular antenna

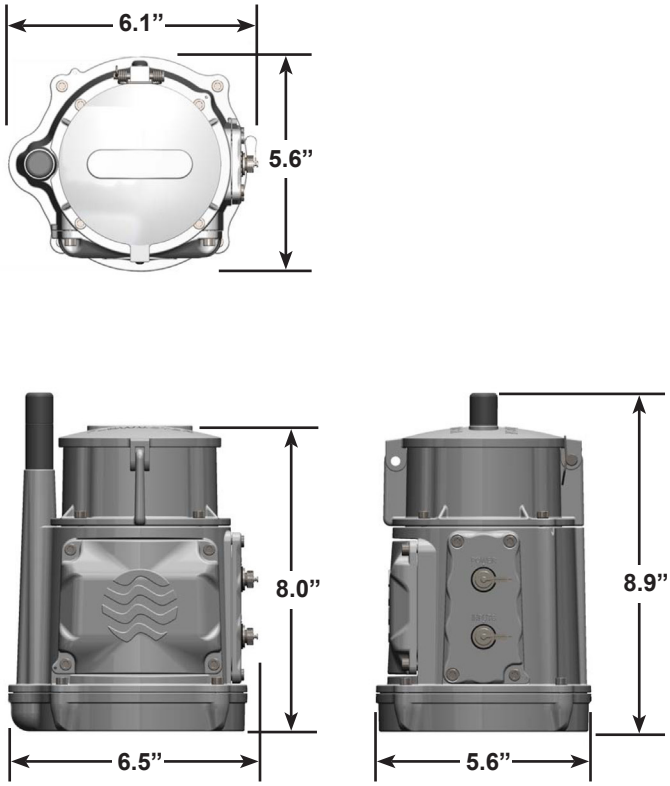

Figure 13. FlowConnect unit with non-rechargeable batteries and satellite antenna

The optional register cover for the FlowConnect is available to order. Made of a heavy-duty, durable material, it will protect the register from exposure from the elements. Part number is TOB065.

8.0 MAINTENANCE

8.1 Recommended Maintenance

- **Replacing the batteries in the FlowConnect unit**

  Battery life for the FlowConnect is estimated to be 3 - 4 years. To replace batteries, see page 5 for instructions on opening the battery cover and connecting batteries.

- **Replacing the battery under the FlowCom register**

  The estimate life for the battery that powers the FlowCom register is 6 - 10 years. Battery replacement instructions can be found in both FlowCom IOMs.

WARRANTY

Manufacturer warrants all products of its manufacture to be free from defects in workmanship and material under normal use and service. This warranty extends for a period of twelve (12) months after date of shipment, unless altered by mutual agreement between the purchaser and manufacturer prior to the shipment of the product. If this product is believed to be defective, purchaser shall notify manufacturer and will return the product to the manufacturer, postage paid, within twelve (12) months after date of shipment by the manufacturer. If the purchaser believes the return of the product to be impractical, manufacturer shall have the option, but will not be required, to inspect the product wherever located. In any event, if the purchaser requests the manufacturer visit their location, the purchaser agrees to pay the non-warranty expenses of travel, lodging and subsistence for the field service response. If the product is found by the manufacturer's inspection to be defective in workmanship or material, the defective part or parts will either be repaired or replaced, at manufacturer's election, free of charge, and if necessary the product will be returned to purchaser, transportation prepaid to any point in the United States. If inspection by the manufacturer of such product does not disclose any defect of workmanship or material, manufacturer's regular service repair charges will apply. Computing devices sold but not manufactured by McCrometer, Inc. are covered only by the original manufacturer's written warranty. Hence, this warranty statement does not apply.

THE FOREGOING WARRANTY IS MANUFACTURER'S SOLE WARRANTY, AND ALL OTHER WARRANTIES, EXPRESS, IMPLIED OR STATUTORY, INCLUDING ANY IMPLIED WARRANTY OF MERCHANTABILITY OR FITNESS FOR A PARTICULAR PURPOSE, ARE NEGATED AND EXCLUDED. THE FOREGOING WARRANTY IS IN LIEU OF ALL OTHER WARRANTIES, GUARANTEES, REPRESENTATIONS, OBLIGATIONS OR LIABILITIES ON THE PART OF THE MANUFACTURER.

Purchaser's sole remedy and manufacturer's sole obligation for alleged product failure, whether under warranty claim or otherwise, shall be the aforestated obligation of manufacturer to repair or replace products returned within twelve months after date of original shipment. The manufacturer shall not be liable for, and the purchaser assumes and agrees to indemnify and save harmless the manufacturer in respect to, any loss or damage that may arise through the use by the purchaser of any of the manufacturer's products.

If you experience problems with your FlowCom register, please contact your local factory representative for assistance. You may also contact Customer Service at the factory directly at 951-652-6811. Be prepared to provide the serial number off of your meter or FlowCom register (this information is located on the lid of the register).

When returning McCrometer products to the factory for repair or warranty consideration, a return authorization number (RA) must be obtained from the factory and referenced on the outside of the box of the products you are returning. The products should be shipped back to the factory at:

McCrometer
3255 West Stetson Avenue
Hemet CA 92545

OTHER McCROMETER PRODUCTS INCLUDE:

Propeller Flow Meters

Water Specialties Propeller Meters

Propeller Meter

Magnetic Flow Meters

FPI Mag™

Ultra Mag

SPI Mag™

Dura Mag

Field Mag®

Vera Mag®

Vera FPI Mag™

Mag3000™

Mag2000™

Differential Pressure Flow Meters

√CONE®

V-Cone®

Wafer-Cone®

Digital Register

FlowCom™

Mag Meter Flow Converters

ProComm GO 3000

ProComm 5000

Connected Solutions

FlowConnect™

Smart Output™

SmartTrax

McCrometer Connect®

Copyright © 2023 McCrometer, Inc. All printed material should not be changed or altered without permission of McCrometer. Any published pricing, technical data, and instructions are subject to change without notice. Contact your McCrometer representative for current pricing, technical data, and instructions.

3255 WEST STETSON AVENUE • HEMET, CALIFORNIA 92545 USA
TEL: 951-652-6811 • 800-220-2279 • FAX: 951-652-3078
www.mccrometer.com

McCROMETER